WATER FALL Cascade spout for wall mounting - Chrome

IMO

13 420 979 Product version from 4/1/2023

- 120mm projection
- CASCADE, max. flow rate 26.5 l/min (at 3 bar)
- cover plate 240 x 60 mm
- 1/2" connection
- plug-link mounting
- WRAS

Fits: IMO, LULU, MADISON, MEM, TARA, CL.1, LISSÉ, VAIA, META, CYO

Chrome	13 420 979-00
Brushed Platinum	13 420 979-06
Platinum	13 420 979-08
Dark Chrome	13 420 979-19
Light Gold	13 420 979-26
Brushed Light Gold	13 420 979-27
Brushed Durabrass (23kt Gold)	13 420 979-28
Matte Black	13 420 979-33
Brushed Bronze	13 420 979-42
Brushed Champagne (22kt Gold)	13 420 979-46
Champagne (22kt Gold)	13 420 979-47
Brushed Chrome	13 420 979-93

Recommended miscellaneous

Concealed wall elbow - 35 085 970 90
●max. recess depth mm
●min. recess depth mm

Recommended miscellaneous

Concealed wall elbow - 35 085 970 90
●max. recess depth mm
●min. recess depth mm

WATER FALL Cascade spout for wall mounting - Chrome

IMO

13 420 979 Product version from 4/1/2023

mm [inches]

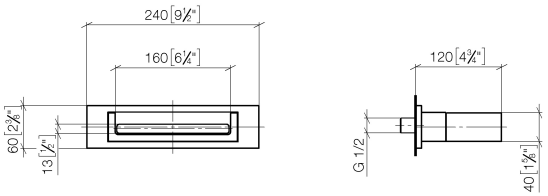

Flow rate chart

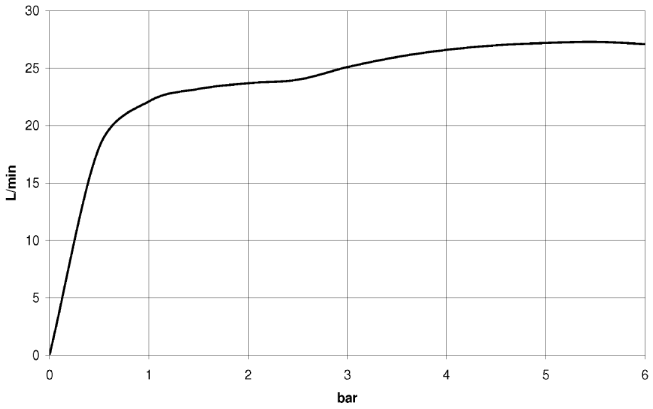

Trajectory diagram

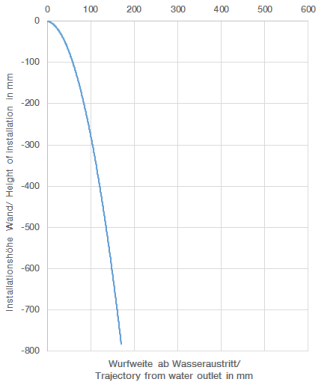

Codes & Standards

ASME A112.18.1	cUPC	DIN 4109	ISO 3822
Scottish Water Byelaws	UK Water Supply Regulations	Ü-Zeichen	

Certificates

LGA_18 IAPMO_4976 WRAS_2111

WATER FALL Cascade spout for wall mounting - Chrome

IMO

13 420 979 Product version from 4/1/2023

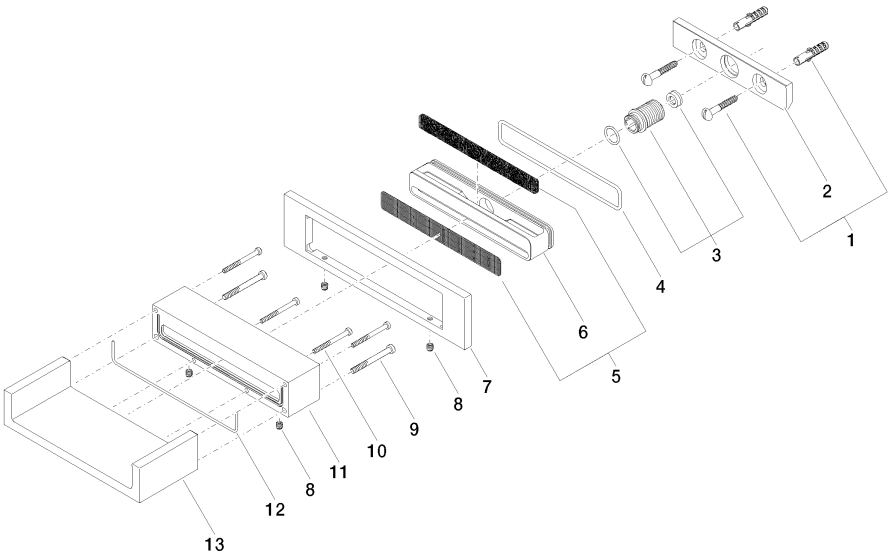

Spare parts list

No.	Item Number	Name	Quantity used	Delivery time
1	04 30 31 024 01 90	fixing set	1	2
2	09 17 97 056 90	holder	1	2
3	90 24 05 008 00 90	nipple set	1	2
4	09 14 10 504 90	seal	1	2
5	90 29 30 040 00 90	insert	1	2
6	09 17 11 044 20 90	distributor	1	2
7	09 27 97 034-00	rosette	1	10
8	09 31 11 049 90	pin	4	2
9	09 30 30 147 90	screw	2	2
10	09 30 30 086 90	screw	4	2
11	09 30 01 104-00	casing	1	10
12	09 14 03 504 90	seal	1	2
13	09 11 94 046-00	spout	1	10

We reserve the right to change designs, product range and technical specifications without prior notice.
More information can be found at: www.dornbracht.com +49 (0) 2371 8899 900 mail@dornbracht.com